Assembly Instructions

Your sofa comes packaged in three box.DO NOT use and sharp object to open plastic wrapped components,as damage to product or components may result.

Carefully remove all of the components from the packaging and set aside for assembly.

Assemble on a soft surface to prevent scratching the finish.

Your sofa style may differ from images. Care for your furniture by periodically tightening all legs. fabric will fade or discolor in direct sunlight.

Minimize exposure to direct sunlight to extend the life of your furniture.

Left 2 Loveseat

A*1	B*2	C*2	D*1	E*4
Seat	Seat Cushion	Back Cushion	Pillow	Leg
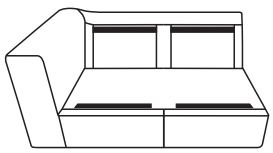	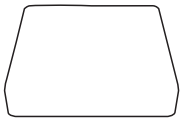	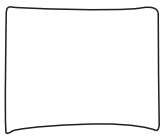	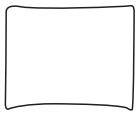	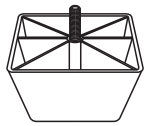

Corner

F*1	G*1	H*1	J*1	E*4
Corner Seat	Seat Cushion	Back Cushion	Back Cushion	Leg
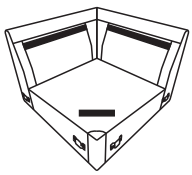	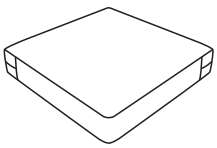	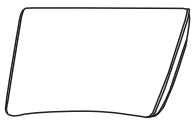	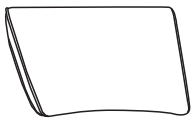	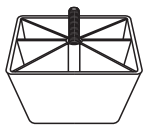

Right 2 Loveseat

K*1	B*2	C*2	D*1	E*4
Seat	Seat Cushion	Back Cushion	Pillow	Leg
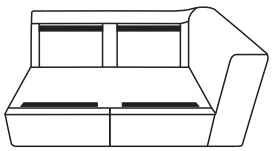		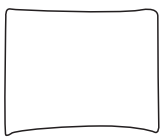	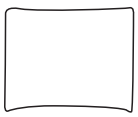	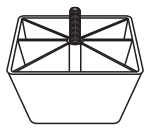

Step 1

Legs and hardware inside.

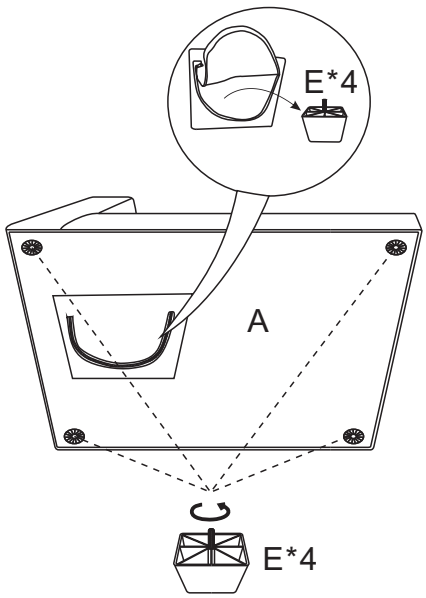

Step 2

Please remove the nylon (film) protector from the Velcro strip before attaching the cover.

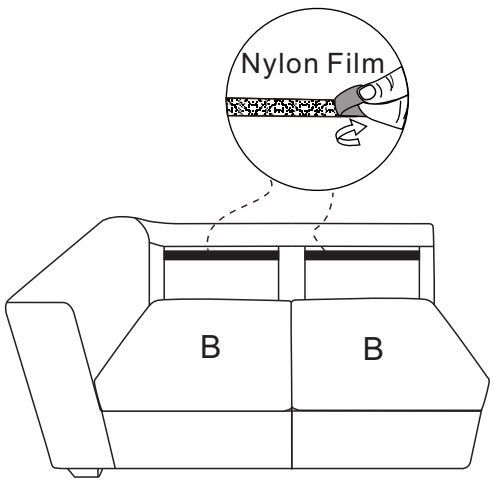

Step 3

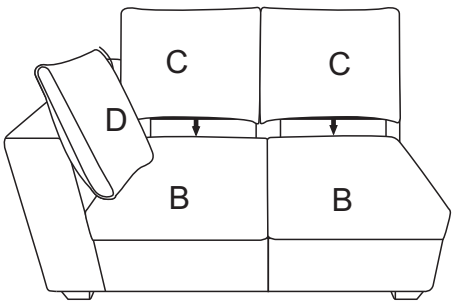

Step 4

Legs and hardware inside.

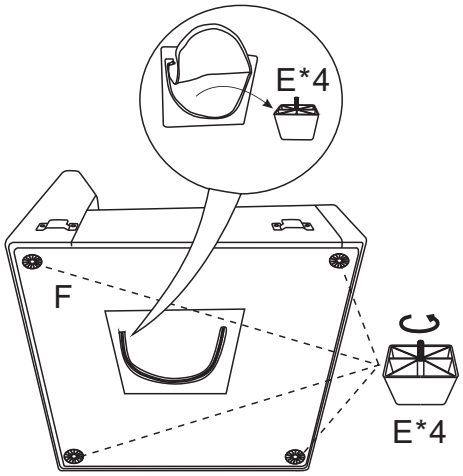

Step 5

Please remove the nylon (film) protector from the Velcro strip before attaching the cover.

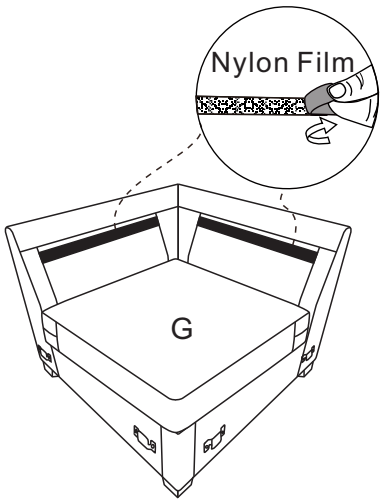

Step 6

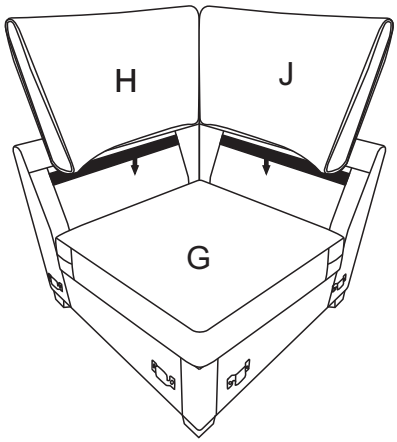

Step 7

Legs and hardware inside.

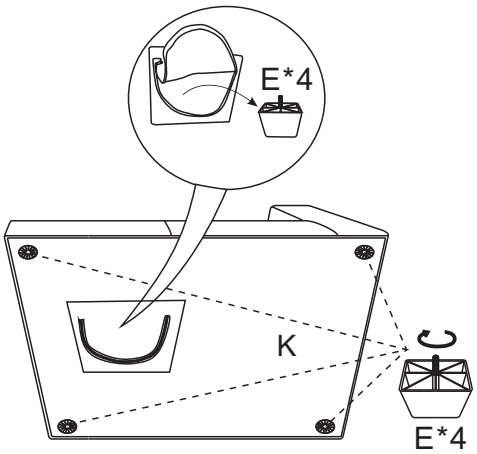

Step 8

Please remove the nylon (film) protector from the Velcro strip before attaching the cover.

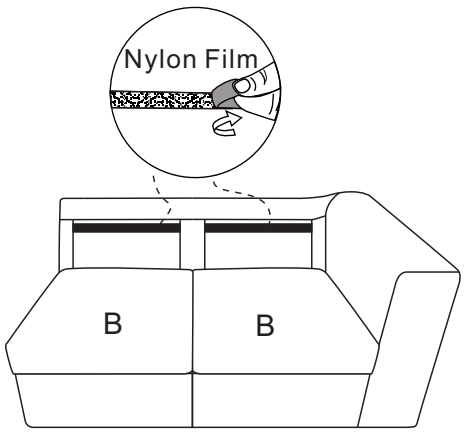

Step 9

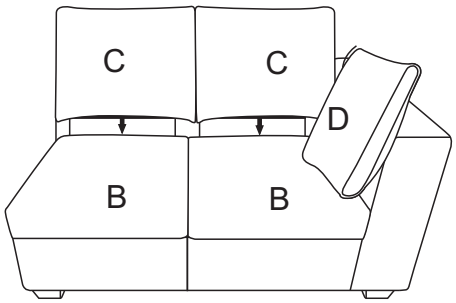

Step 10

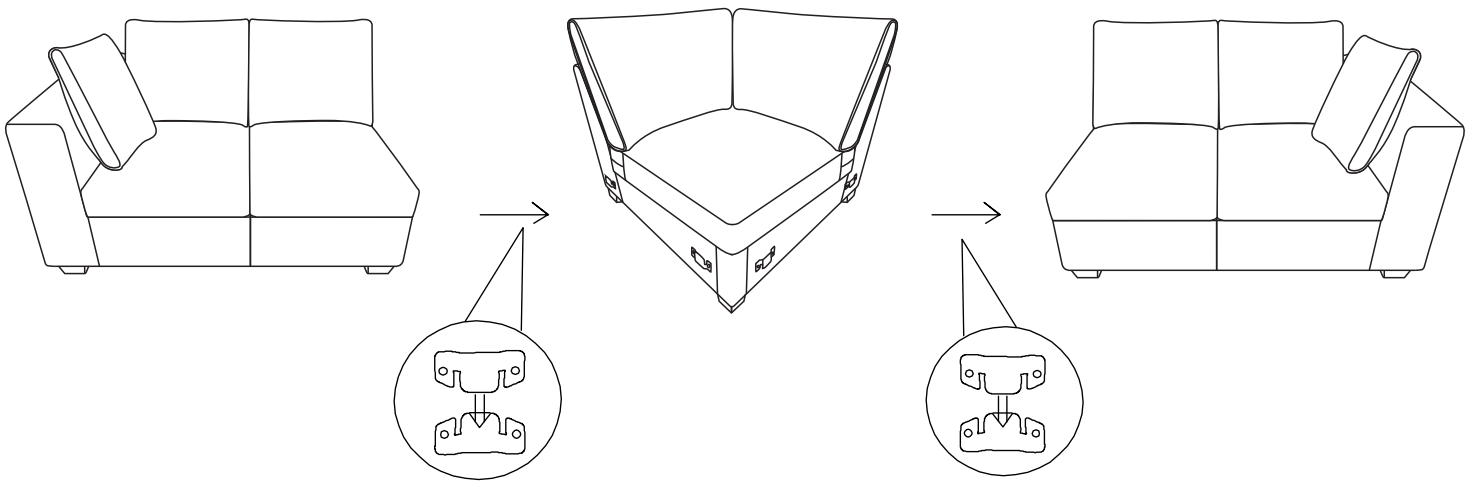

Step 11

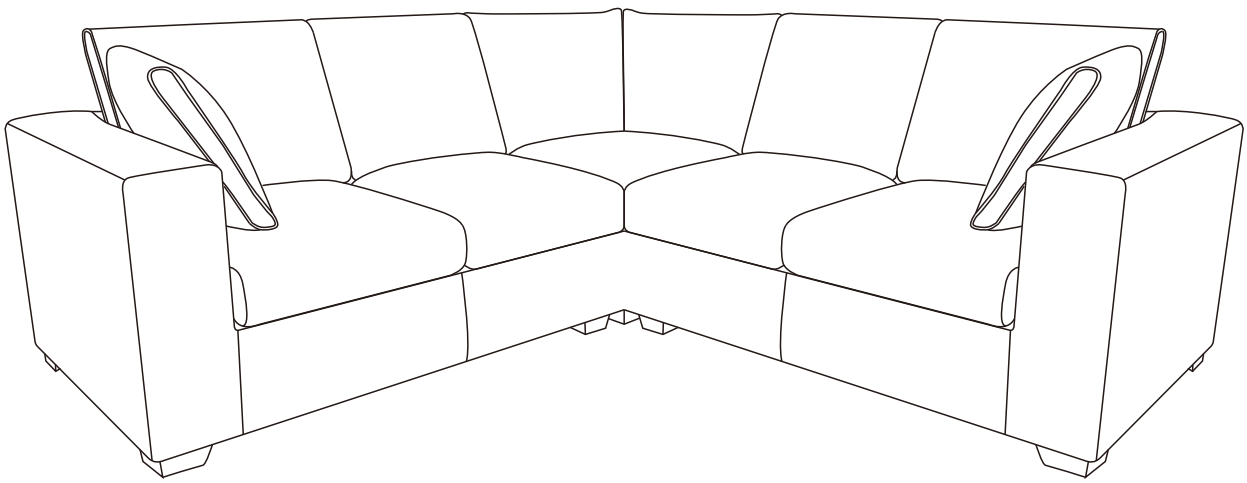

PLEASE READ "VELVET MAINTENANCE INSTRUCTIONS" AT THE BACK IF YOU HAVE PURCHASED AN ITEM IN VELVET FABRIC.